SDR Series regulator

Symbol

Product feature

1. Back pressure structure, compact type, cost-effective, installation time saving.
2. Broad regulating range; low-pressure type is optional other than the standard type; stable output pressure; applicable to situation which has low expectation on output pressure but high expectation on performance and cost-effectiveness.
3. Single unit installation; easy to mount

Specification

Model	SDR100M5	SDR10006	SDR20006	SDR20008	SDR100M5L	SDR10006L	SDR20006L	SDR20008L
Fluid	Air							
Pressure range	0.05~0.9MPa(7~130psi)				0.03~0.4MPa(4~57psi)			
Max. pressure	1.0MPa(145psi)							
Proof pressure	1.5MPa(215psi)							
Temperature range	-20~70℃							
Port size [Note1]	M5	1/8"		1/4"	M5	1/8"		1/4"

[Note1] PT thread, G thread and NPT thread are available.

Ordering code

SDR 200 08 L □ □ 1 □

① ② ③ ④ ⑤ ⑥ ⑦ ⑧

①Model	②Series code	③Port size	④Type code	⑤Accessories	⑥Pressure gauge	⑦Scale[Note]	⑧Thread type
SDR: SDR series regulator	100: 100 series	M5: M5 06: 1/8"	Blank: Standard L: Lower pressure	Blank: Bracket J: No bracket	Blank: Pressure gauge N: No pressure gauge	1: MPa 2: psi 3: bar	Blank:PT G:G T:NP
	200: 200 series	06: 1/8" 08: 1/4"					

[Note] When select no pressure gauge, this code is blank.

Inner structure and material of major parts

SDR Series

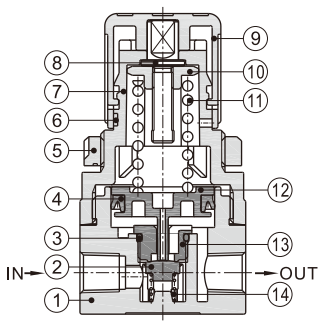

No.	Item	Material
1	Body	Aluminum alloy
2	Needle gasket	NBR
3	O-ring	NBR
4	O-ring	NBR
5	Fixed ring	POM
6	Identification ring	POM
7	Adjusting seat	POM
8	Adjusting pillar	Free-cutting steel
9	Adjusting button	POM
10	Adjusting nut	Steel
11	Adjusting spring	SWC
12	Piston rode	POM
13	Adjusting seat	POM
14	Return spring	SUS304

SDR Series regulator

Pressure and feature of flow

Pressure chart

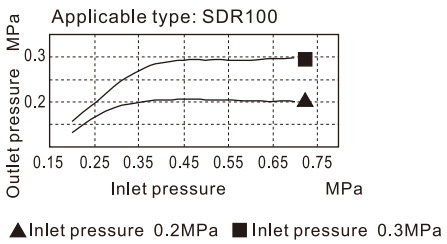

▲Inlet pressure 0.2MPa ■Inlet pressure 0.3MPa

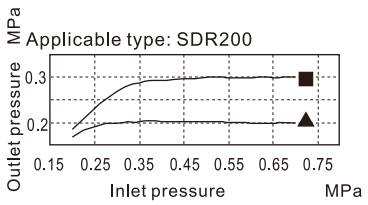

▲Inlet pressure 0.2MPa ■Inlet pressure 0.3MPa

Flow chart

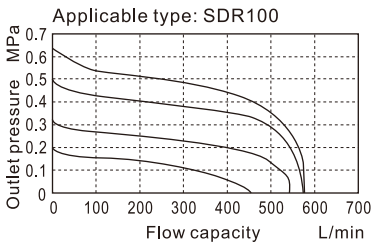

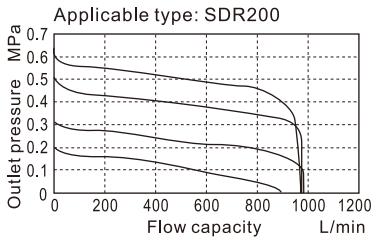

Dimensions

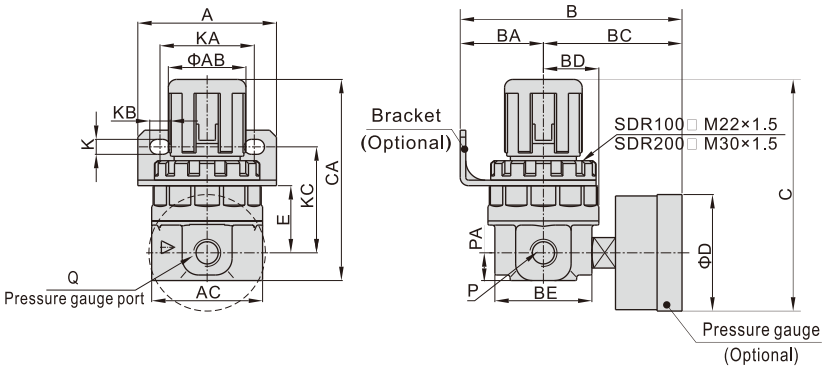

Model\Item	A	AB	AC	B	BA	BC	BD	BE	C	CA	D	E	K	KA	KB	KC	P	PA	Q
SDR100□M5	35	20	32	65.5	26	39.5	14.5	29	62.5	54.5	33	17	5.5	22	7	29	M5	7.5	1/16"
SDR100□06	35	20	32	65.5	26	39.5	14.5	29	62.5	54.5	33	17	5.5	22	7	29	1/8"	7.5	1/16"
SDR200□06	50	28	40	80	30	50	20	35	83.5	72.5	42	24	5.5	34	7.5	38	1/8"	10	1/8"
SDR200□08	50	28	40	80	30	50	20	35	83.5	72.5	42	24	5.5	34	7.5	38	1/4"	10	1/8"

Note: Bracket and pressure gauge are optional.

Attentions of application

Unlock the regulating knob before pressure adjustment, then lock it after the adjustment. Otherwise, may cause the regulating knob damage or the outlet pressure change.

1. Pull the regulating knob to unlock, when the orange marking ring below the regulating knob appears, indicating that the regulating knob is unlocked.
2. Push the regulating knob to lock, when the orange marking ring below the regulating knob disappears completely, indicating that the regulating knob is locked.